Basler IP Fixed Dome Camera

High Quality For Professional Video Surveillance

- Weather-proof vandal-resistant aluminum housing
- All camera functions, including heater and fan, can be powered with standard PoE (802.3af)
- Dual-encoding with MJPEG, MPEG4, or H.264
- Multi-streaming for multiple customized streams
- Day/night capability by automatically retractable IR Cut filter
- Outstanding image quality from highly sensitive CCD sensors
- Built-in microSDHC card slot for local storage
- Wall or ceiling mounting, flexible aiming through internal three axis camera bracket
- Made in Germany

BASLER
VISION TECHNOLOGIES

Technical Details

Specifications

Basler IP Camera	BIP-D1000c-dn	BIP-D1300c-dn
Image Sensor	1/3" Sony Wfine progressive scan RGB CCD	1/3" Sony EXview HAD progressive scan RGB CCD
Effective Pixels	1024 (H) x 768 (V)	1280 (H) x 960 (V)
Frame Rate (max.)	MJPEG / MPEG-4 / H.264	MJPEG / MPEG-4 / H.264
Full Resolution:	18 fps / 11 fps / 10 fps	11 fps / 9 fps / 7 fps
D1 (720 x 480):	30 fps / 30 fps / 25 fps	30 fps / 25 fps / 25 fps
	Max sensor readout rate: 30 fps	Max sensor readout rate: 30 fps
Pixel Size	4.65 µm x 4.65 µm	3.75 µm x 3.75 µm
Minimum Illumination	Color (day mode): 1.7 lx (F1.3/33 ms) B/W (night mode): 0 lx (with IR illumination)	Color (day mode): 1.28 lx (F1.3/33 ms) B/W (night mode): 0 lx (with IR illumination)
Lens	Varifocal 2.8 - 10 mm, F1.3, DC iris, horizontal angle of view 20° - 80°, removable IR-cut filter for day/night function	
Camera Angle Adjustment	Pan: ±180°, tilt: 120°, rotation: 360°	
Image Settings	Automatic gain, exposure area, backlight compensation, white balance, electronic shutter, 180° image rotation, anti-flicker, electronic PTZ via AOI (API), text overlay, privacy masks, motion detection	
Resolution	From 32 x 32 to 1024 x 768 (free scaling), 4:3, 16:9, multiple Areas of Interest (AOIs)	From 32 x 32 to 1280 x 960 (free scaling), 4:3, 16:9, multiple Areas of Interest (AOIs)
Video Compression	Motion JPEG: Multiple compression levels MPEG-4: SP (Level 3) H.264 (MPEG-4 AVC): Baseline (Level 3)	
Video Streaming	Simultaneous dual encoding for MJPEG and MPEG-4 or H.264, multi-streaming for MJPEG, multicast and unicast, VBR and CBR for MJPEG, MPEG-4, and H.264	
Alarm Management	Ring buffer for pre and post alarm, microSDHC card slot for local storage Events triggered by motion detection or external input Image upload over FTP, e-mail, or HTTP	
Protocols	TCP/IP, HTTP, UDP, FTP, ICMP, ARP, DHCP, NTP, RTP, RTSP, RTCP, SMTP, IGMP, ZEROCONF, QoS Layer 3	
Processor/Memory	600 MHz dual-core multimedia DSP, FPGA 128 MB RAM, 8 MB Flash	
Power	PoE (Power over Ethernet IEEE 802.3af Class 0) or 7 to 24 DC, power consumption is 7 W max at 12 VDC (excl. heater)	
Connectors	RJ-45 connector for 10/100 BASE-T Ethernet, full or half duplex Push-in terminal for DC power, digital I/O and RS-485/422	
Operating Conditions	-35° to 50° C (-31° to 122° F), <90 % relative humidity (non-condensing)	
Standards	DIN EN 50130-4, FCC Class A, CE, RoHS	
Housing	Ø 148 mm x 122 mm (Ø 5.83" x 4.8") aluminum chassis with polycarbonate dome bubble, IP66, IK10	
Weight	~1.0 kg	

Specifications are subject to change without prior notice.

Dimensions in mm (inch)

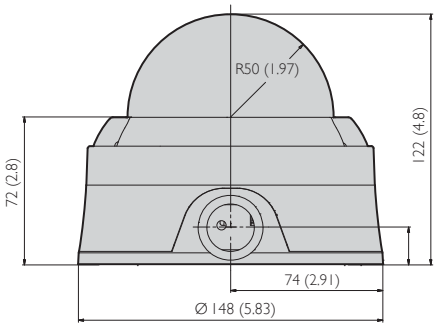

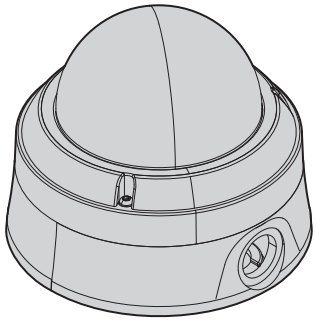

Germany, Headquarters
Phone +49 4102 463 500
Fax +49 4102 463 599
bc.sales.europe@baslerweb.com

USA
Phone +1 610 280 0171
Fax +1 610 280 7608
bc.sales.usa@baslerweb.com

Singapore
Phone +65 6425 0472
Fax +65 6425 0473
bc.sales.asia@baslerweb.com

BASLER VISION TECHNOLOGIES

click. see. smile!