Basler IP Camera
BIP-1300c
BIP-1300c-dn

The Basler BIP-1300c and BIP-1300c-dn IP cameras provide excellent image quality at high frame rates with megapixel resolution (1280 x 960). The Sony EXview HAD CCD progressive scan sensor achieves a further increase in sensitivity for low light conditions. This characteristic of the BIP-1300c and BIP-1300c-dn is especially appropriate for professional indoor and outdoor solutions.

Features and Benefits:

Dual-encoding and multi-view streaming

Video compression with standards-compliant MJPEG, MPEG-4, or H.264 encoding provides a perfect fit for the varied requirements of users and clients. This flexible approach allows the customized use of multiple MJPEG streams while also using an MPEG-4 or H.264 encoded stream. The resolution and frame rate of the MJPEG image streams and the MPEG-4 or H.264 stream can be independently adjusted.

Innovative Streaming Principle

MPEG-4/H.264
MJPEG (1)
MJPEG (2)

Dual-Encoding and Multi-Streaming

Scaling and AOI feature

To display a maximum of detail with the highest precision, several image formats and any aspect ratio can be configured.
The unique Area of Interest (AOI) feature lets users define customized regions within the original field of view. The selected areas of interest can be streamed and encoded separately to realize not only ePTZ but also multiple virtual cameras. This means that only relevant image details will be transmitted, avoiding redundant data and leading to a significant reduction in the bandwidth required.

Ideal image quality

A flexible set of control functions (white balance, brightness control, AGC, etc.) ensures outstanding quality images for a variety of applications. The use of a high-performance Sony CCD imaging sensor provides exceptional sensitivity for low lighting conditions. Moreover, these CCD sensors employ the progressive scan method, which is the basis for exceptional image quality with reduced motion blur.

Day and night functionality

True day and night functionality via an automatically retractable IR-cut filter provides a high image quality color mode for daylight applications and a black and white mode for night and low light conditions.

Motion detection and intelligent alarm buffering

Up to five different masks for motion detection can be combined with extensive event and alarm management functionality. Configurable internal ring buffer storage makes it possible to access pre and post alarm images.

Compact, robust design

An ultra-compact, all-metal housing with an 89.8 mm x 29 mm x 44 mm size and a weight of only 230 grams makes these the smallest IP cameras in their class.

Qutstanding Quality - Made in Germany

To ensure consistently high product quality, we employ several inspection procedures during manufacturing. The following list indicates some of the most important quality assurance tools we use to meet your highest requirements.

Camera Test Tool (CTT+)

Our advanced Camera Test Tool (CTT+), the first fully automated inspection system for digital cameras, checks all of the significant quality aspects of each camera we produce. The CTT+ is a unique combination of optics, hardware, and software that can be quickly and efficiently used to calibrate a camera and to measure its performance against a set of standards. For defined sets of conditions, an automated software program examines the camera's output, makes any calibration adjustments necessary, and compares the output to a strictly defined set of performance criteria.

Camera Sensor Alignment Tool (CSAT):

Due to higher resolutions and smaller pixels, depth of focus and the exact positioning of the imaging sensor in the camera are becoming more and more critical. An area scan sensor must be aligned in six degrees of freedom.

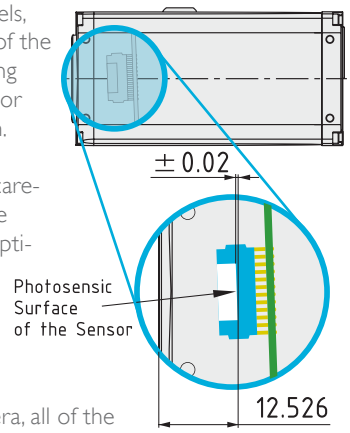

The back focal length on each camera is carefully measured and adjusted by our unique "CSAT" procedure. This guarantees an optimum distance between the lens flange and the sensor and ensures outstanding image quality based on compliance with optics standards.

Basler customers get a 100% tested camera, all of the benefits that go along with 100% testing, and a much higher level of satisfaction.

BASLER VISION TECHNOLOGIES

click. see. smile!

Basler IP Camera
BIP-1300c
BIP-1300c-dn (day/night)

Specifications

Image Sensor	1/3" Sony EXview HAD progressive scan RGB CCD		
Effective Pixels	1280 (H) x 960 (V)		
Frame Rate (max.) Full Resolution: D1 (720 x 480):	MJPEG 11 fps 30 fps Max sensor readout rate: 30 fps	MPEG-4 9 fps 25 fps	H.264 7 fps 25 fps
Pixel Size	3.75 µm x 3.75 µm		
Day/Night	Removable IR-Cut Filter (BIP-1300c-dn)		
Minimum Illumination	Color: 0.95 lux (F1.0/33ms), Day/Night: 0 lux (with IR illumination)		
Lens	CS-mount, DC iris drive (lens not included)		
Image Settings	Automatic gain, exposure area, backlight compensation, white balance, electronic shutter, 180° image rotation, anti-flicker, electronic PTZ via AOI (API), text overlay, privacy masks, motion detection		
Resolution	From 64 x 64 to 1280 x 960 (free scaling), 4:3, 16:9, multiple Areas of Interest (AOIs)		
Video Compression	Motion JPEG: Multiple compression levels MPEG-4: SP (Level 3) H.264 (MPEG-4 AVC): Baseline (Level 3)		
Video Streaming	Simultaneous dual encoding for MJPEG and MPEG-4 or H.264, multi-streaming for MJPEG, VBR and CBR for MJPEG, MPEG-4, and H.264, multicast and unicast		
Alarm Management	Ring buffer for pre and post alarm Events triggered by motion detection, or external input Image upload over FTP, e-mail, or HTTP		
Protocols	TCP/IP, HTTP, UDP, FTP, ICMP, ARP, DHCP, NTP, RTP, RTSP, RTCP, SMTP, IGMP, ZEROCONF, QoS Layer 3		
Processor/Memory	600 MHz dual-core multimedia DSP, FPGA 128 MB RAM, 8 MB flash		
Power	PoE (Power over Ethernet IEEE 802.3af Class 2) or 7 to 20 VDC, power consumption is 5 W max at 12 VDC		
Connectors	RJ-45 connector for 10/100 BASE-T Ethernet, full or half duplex 6 pin terminal for DC power, digital I/O and RS-232		
Operating Conditions	0° to 50° C (32° to 122° F), < 90 % relative humidity (non-condensing)		
Standards	DIN EN 50130-4, FCC Class B, CE, RoHS		
Housing	89.8 mm x 29 mm x 44 mm (full metal casing)		
Weight	~230 g		

Specifications are subject to change without prior notice.

Dimensions in mm (inch)

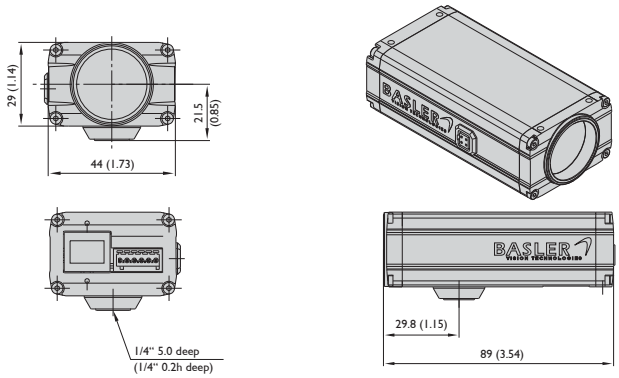

Germany, Headquarters
Phone +49 4102 463 500
Fax +49 4102 463 599
bc.sales.europe@baslerweb.com

USA
Phone +1 610 280 0171
Fax +1 610 280 7608
bc.sales.usa@baslerweb.com

Singapore
Phone +65 6425 0472
Fax +65 6425 0473
bc.sales.asia@baslerweb.com

Taiwan
Phone +886 3 558 3955
Fax +886 3 558 3956
ip.sales.asia@baslerweb.com

BASLER VISION TECHNOLOGIES

click. see. smile!